PNEUMATIC ACTUATOR · 0–90°

AT651U

Double acting & spring return pneumatic actuator

AT651U-DM

Quarter-turn pneumatic actuator for 0–90° valve automation, available double acting (D) or spring return with spring sets S 05 to S 12.

- Double acting or spring return (S 05 – S 12)
- ISO 5211 F16 standard flange
- Optional flanges: F14 · F12
- Air ports 2 and 4 · G3/8"
- ST, HT and LLT temperature versions

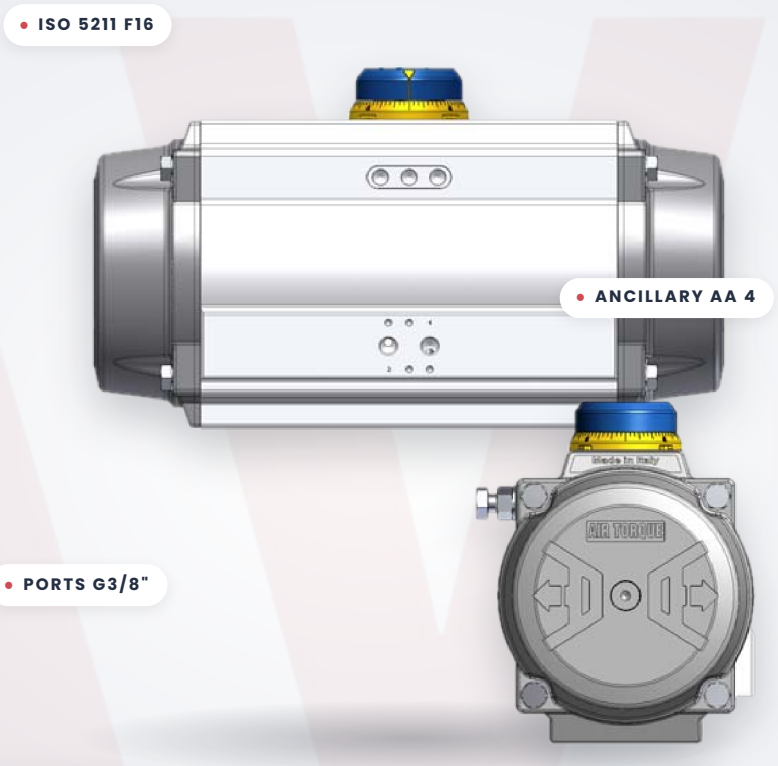

2859 Nm	8 bar	F16	54.6 kg
DA TORQUE @ 8 BAR	MAX. PRESSURE	STD ISO 5211 FLANGE	APPROX. WEIGHT (DA)

Double acting output torque.

NM · 0° AND 90°

Pressure (bar)	2.5	3	3.5	4	4.2	4.5	5	5.5	6	7	8
Torque (Nm)	**893**	**1072**	**1251**	**1430**	**1501**	**1608**	**1787**	**1966**	**2144**	**2502**	**2859**

Stroke

Rotation & travel adjustment

Rotation (std)	**0° – 90°**
Max. stroke	**-5° to +95°**
Adjustable	**-5...+15° / +75...+95°**
Screw adjustment	**1° per 1/6 turn**

Air & timing

Chamber Ø 240 mm · max. 8 bar

Air volume (open/close)	**10 / 15.2 L**
Moving time D (open/close)	**3.5 / 4.0 s**
Moving time S (open/close)	**4.1 / 4.6 s**
Ancillary attachment	**AA 4**

Temperature

Operating range options (°C)

ST (standard)	**-40 to +80**
HT (high temp.)	**-15 to +150**
LLT (extreme low)	**-55 to +80**
Max. pressure	**8 bar**

SPRING RETURN SETS S 05 · S 06 · S 07 · S 08 · S 09 · S 10 · S 11 · S 12 Full torque table overleaf

Moving times measured under the test conditions listed overleaf. Every temperature range option requires proper components and lubricant – see Air Torque technical data sheet T.D.S. U00501E.

SUPPLIED & SUPPORTED IN THE UK BY
Actuation Valve & Control Ltd
actuation.co.uk

DIMENSIONS & MOUNTING

AT651U D/S – 90° dimensions in mm.

ISO 5211 flange options, drive square details and spring return output torque for every spring set from S 05 to S 12.

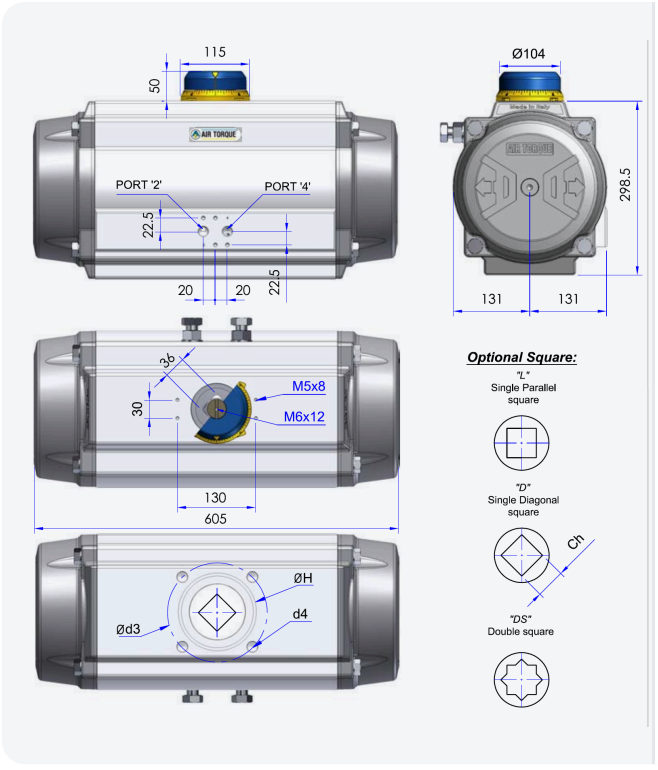

ISO 5211 FLANGE DIMENSIONS

	STANDARD	OPTIONAL	
ISO 5211	**F16**	**F14**	**F12**
Ø d2	130	100	NA
Ø d3	165	140	125
d4	M20x30	M16x24	M12x18
Ø H	130	100	93
Ch x l min. D	27x40 - 46x48		
Ch x l min. DS	36x38 - 46x48		
h min.	2.5	2.5	2.5
h1	1.5	1.5	NA

Spigot (Ø d2 / h1): only on request. NA = not available.

CONNECTION / ATTACHMENT

Pressure connection: port 2 and 4	**G3/8"**
Ancillary attachment	**AA 4**

OPTIONAL SQUARE

"D" single diagonal square · **"L"** single parallel square · **"DS"** double square

Spring return output torque.

NM · START / END OF STROKE

Spring set	2.5 bar		3 bar		3.5 bar		4 bar		4.2 bar		4.5 bar		5 bar		5.5 bar		6 bar		7 bar		8 bar		Spring stroke		Approx. weight (kg)
	0°	90°	0°	90°	0°	90°	0°	90°	0°	90°	0°	90°	0°	90°	0°	90°	0°	90°	0°	90°	0°	90°	90°	0°	
	Start	End	Start	End	Start	End	Start	End	Start	End	Start	End	Start	End	Start	End	Start	End	Start	End	Start	End	Start	End	
S 05	533	372	712	551	890	730	1069	908	1141	980	1248	1087	1426	1266									**521**	**360**	**60.6**
S 06	461	268	640	447	818	625	997	804	1068	876	1176	983	1354	1162	1533	1340							**625**	**433**	**61.8**
S 07			568	343	746	521	925	700	996	771	1104	879	1282	1057	1461	1236	1640	1415					**730**	**505**	**63**
S 08					674	417	853	596	924	667	1032	774	1210	953	1389	1132	1568	1310	1925	1668			**834**	**577**	**64.2**
S 09							781	491	852	563	959	670	1138	849	1317	1028	1495	1206	1853	1564	2210	1921	**938**	**649**	**65.4**
S 10											887	566	1066	745	1245	923	1423	1102	1781	1459	2138	1817	**1042**	**721**	**66.6**
S 11													994	640	1173	819	1351	998	1709	1355	2066	1713	**1146**	**793**	**67.8**
S 12															1101	715	1279	894	1637	1251	1994	1608	**1251**	**865**	**69**

MOVING TIME TEST CONDITIONS

(1) Room temperature, (2) actuator stroke 90°, (3) solenoid valve with orifice of 11 mm and a flow capacity Qn 6000 L/min, (4) inside pipe diameter 11 mm, (5) medium clean air, (6) air supply pressure 5.5 bar (79.75 psi), (7) actuator without external resistance load. When one or more of these parameters differ in the field, the moving time will be different.

OPERATING MEDIUM

The operating medium must be free of dust and oil. Maximum particle size must not exceed 30 µm (ISO 8573 Part 1, Class 5). To prevent water condensation and/or solidification (ice when the actuator works below 0 °C), the operating medium must have a dew point of -20 °C or at least 10 °C below the ambient temperature (ISO 8573 Part 1, Class 3).

Data supplied by Air Torque and provided for reference only. Specifications may change without notice – please confirm details with Actuation Valve & Control before ordering.